Service Data

Vickers®

Motors

Variable Displacement Transmission Motors

MVE-19(X)***-30

MVE19(X)-***-30

Included in →	
■ Rotating Group	923941
Pintle Shim Kit	923938
Bearing Spacer Kit	942401
▲ Seal Kit	923940

Model	Shaft	Valve Block
MVE19-2-**-30	423415	429728
MVE19-6-**-30	435305	
MVE19-9-**-30	424544	
MVE19-17-**-30	575302	
MVE19X-2-**-30	423419	435284
MVE19X-9-**-30	576788	

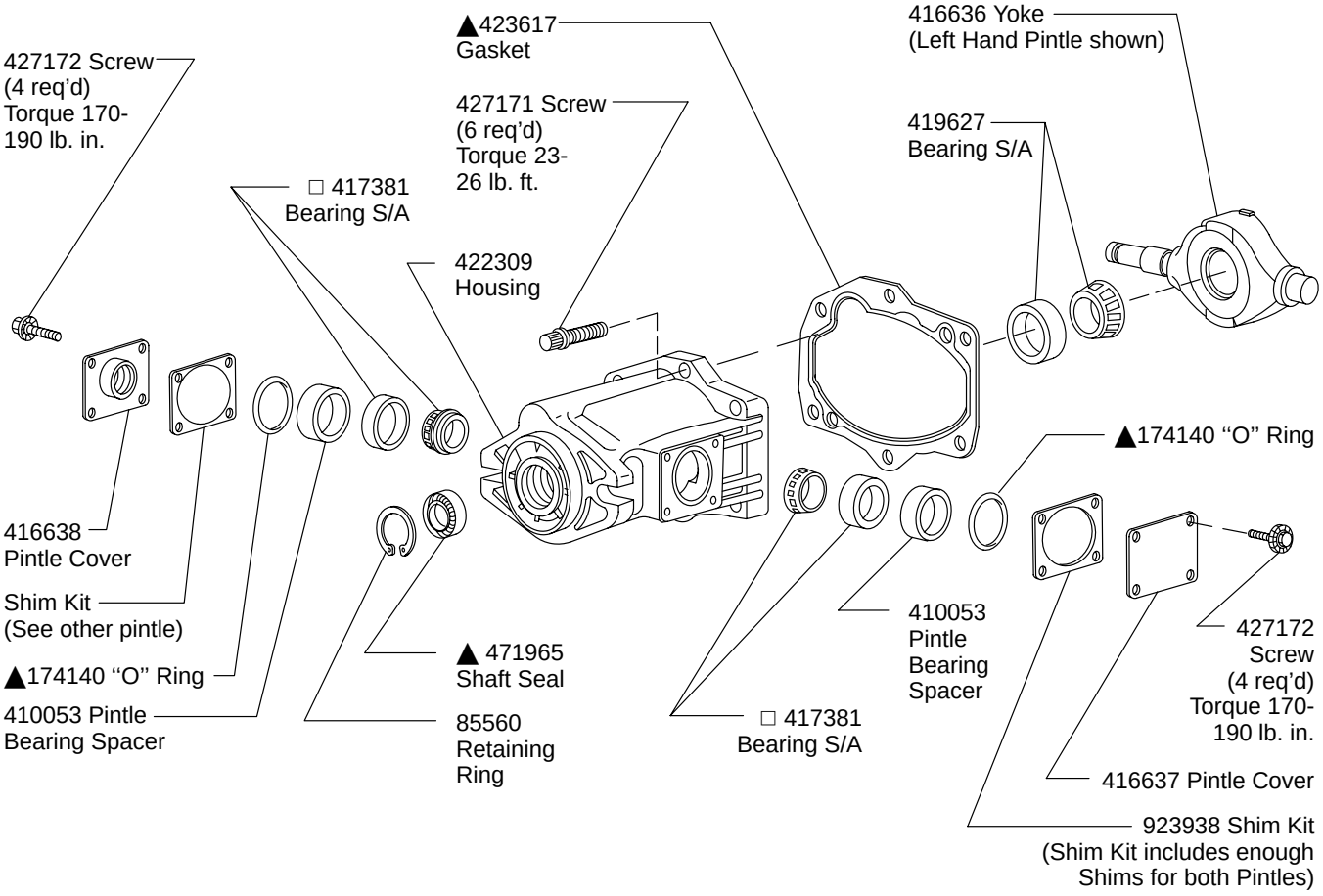

Model	Length	Yoke Angle	Part
MVE19*-**0-30	3.553	0° to 1° 20'	427364
MVE19*-**7-30	3.782	7°	416670
MVE19*-**9-30	3.853	9°	428863
MVE19*-**11-30	3.923	11°	420935
MVE19*-**13-30	3.992	13°	422227
MVE19*-**15-30	4.062	15°	428858

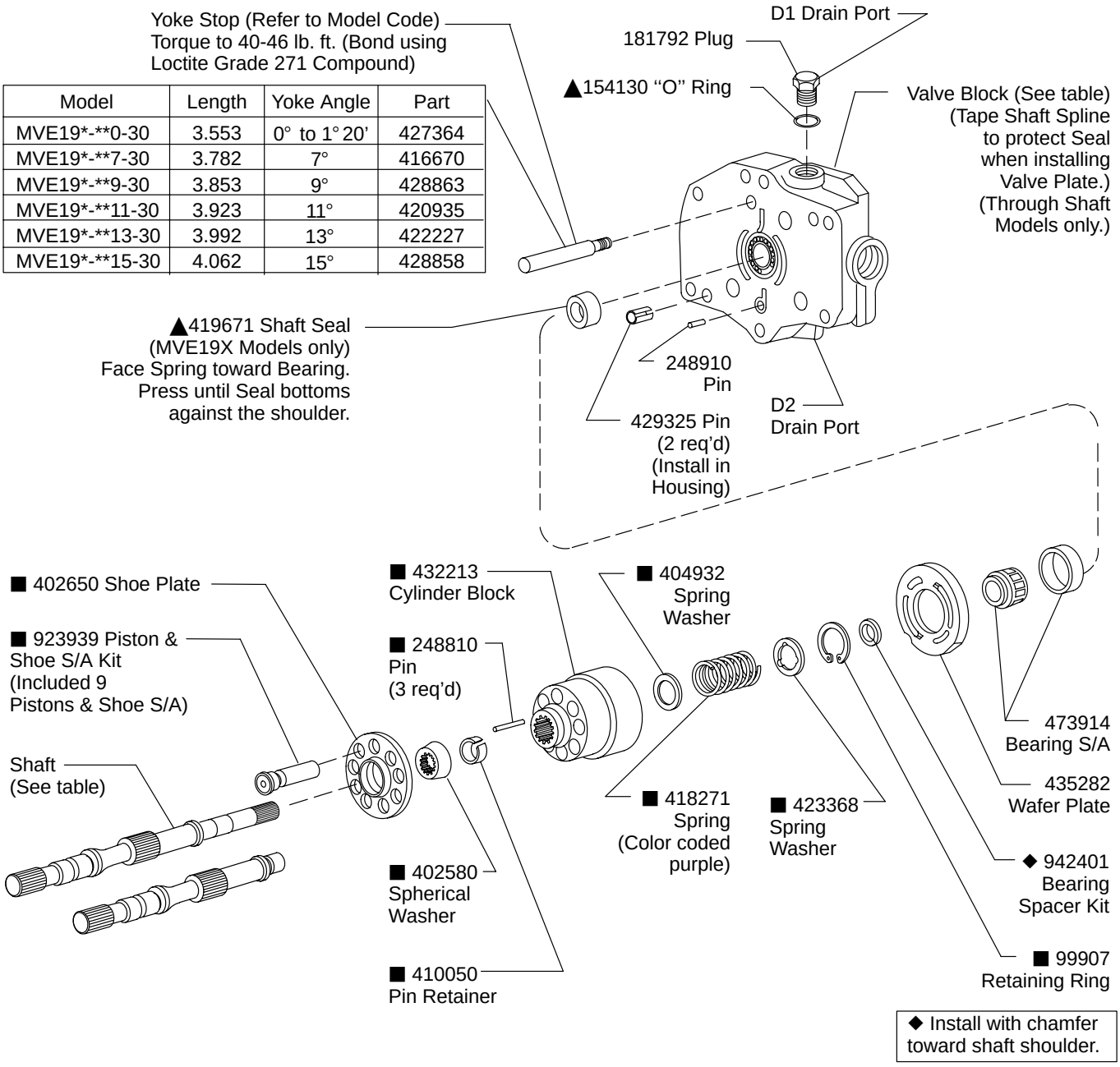

◆ Install with chamfer toward shaft shoulder.

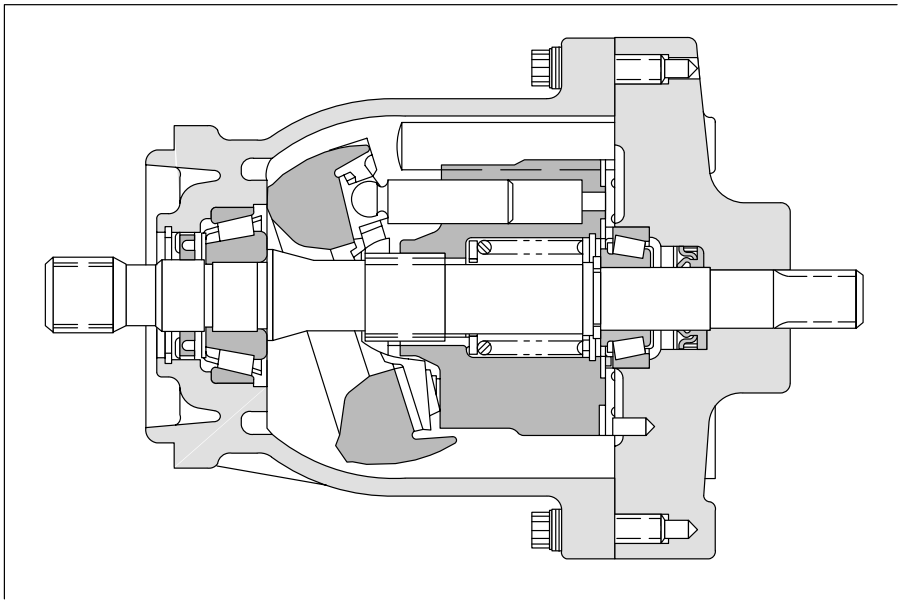

Model Code

M V E 19 (X) - 2 A 7 - 30

1 2 3 4 5 6 7

1 **Model Series**

MVE - Motor, variable displacement, inline piston unit

2 **Flow Rating**
@ 1800 rpm

19 -19 USgpm

3 **Thru Shaft**

25T -32/64P (Flat root side fit, omit for standard single ended shaft)

4 **Input Shaft**

2 - SAE B-B splined

5 **Lever Control Options**
(Viewed from shaft end with D1 drain port up)

A - Right hand
B - Left hand

6 **Min. Displacement Angle**
(Variable units only)

7 - 7° **13** - 13° **11** - 11° **0** - 0°
9 - 9° **15** - 15°

7 **Design**

For satisfactory service life of these components in industrial applications, use full flow filtration to provide fluid which meets ISO cleanliness code 20/18/15 or cleaner. Selections from Eaton OFP, OFR, and OFRS series are recommended.

Printed in U.S.A.